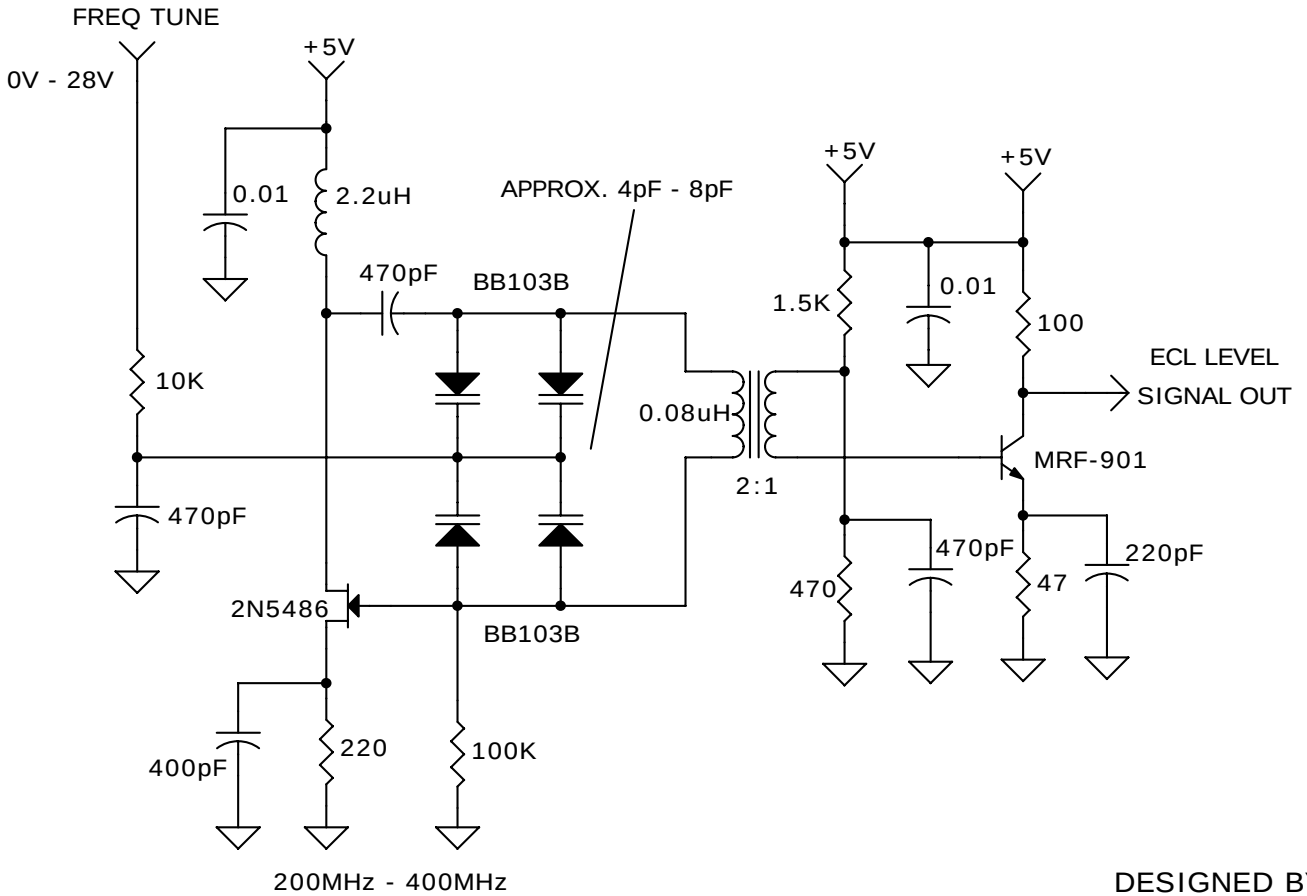

DESIGNED BY DAVE JOHNSON, PE
DISCOVERCIRCUITS.COM
ALL RIGHTS RESERVED

DRAWN BY: DAVE JOHNSON

200MHz - 400MHz VCO

DAVID JOHNSON AND ASSOCIATES ULTRA HIGH FREQUENCY VCO 200MHz - 400MHz		
Size A	Document Number 200MVCO.DSN	Rev A
Date: Monday, July 10, 2006	Sheet 1 of 1	